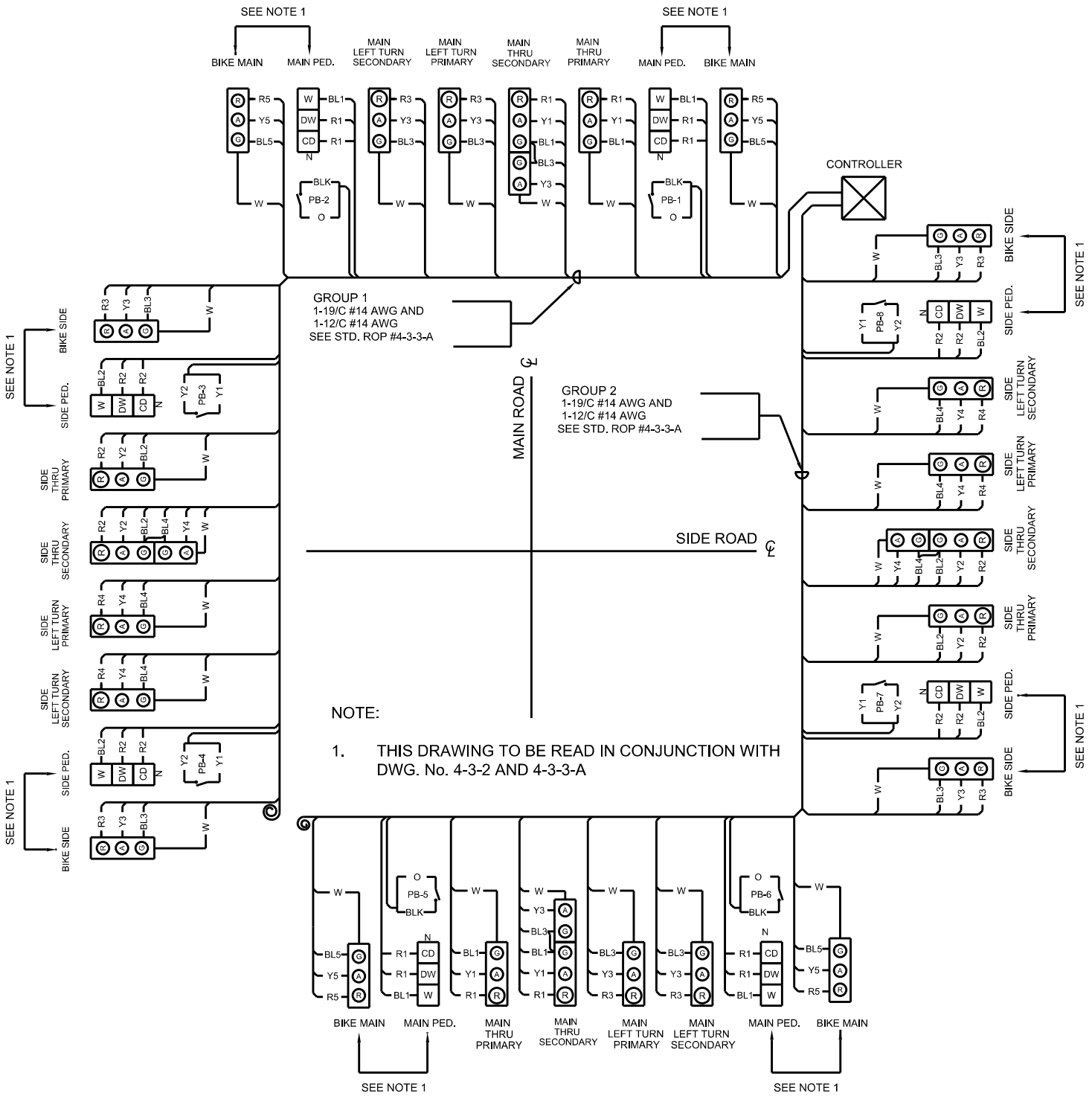

Region of Peel
working with you

PUBLIC WORKS
STANDARD DRAWING

REV. DATE: DECEMBER 2018

APPROVED BY	DRAWN BY
GK	TSS SECTION
STD. DWG. NUMBER	SCALE
4-3-1-A	N.T.S.

TYPICAL TRAFFIC SIGNAL 2 GROUP
(19/C and 12/C) INTERSECTION WIRING SCHEMATIC