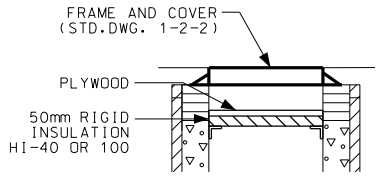

INSULATION DETAIL

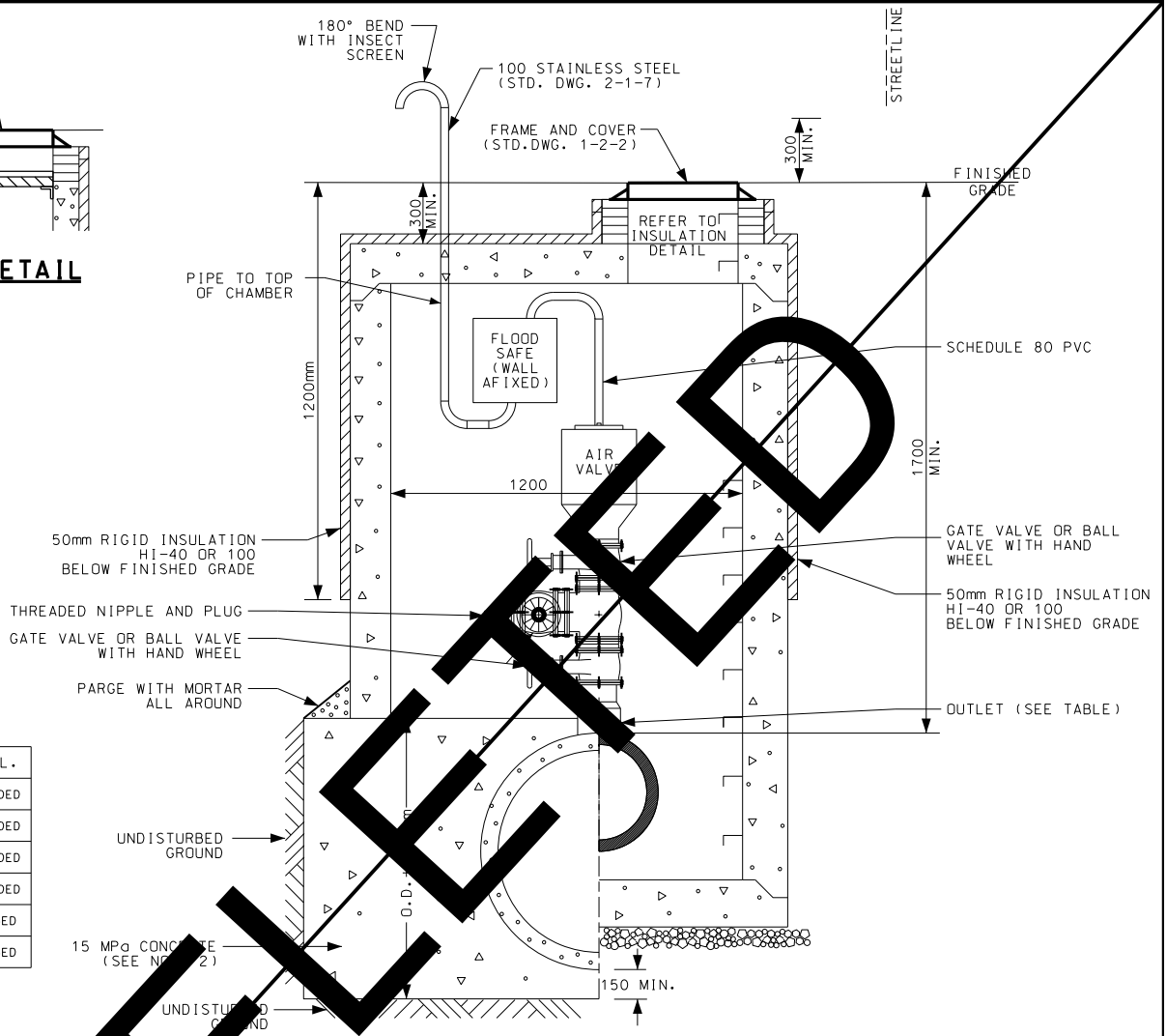

WM. SIZE	GATE VAL.	AIR VAL.
400	25 I.P.T.	25 THREADED
450	25 I.P.T.	25 THREADED
500	50 I.P.T.	50 THREADED
600	50 I.P.T.	50 THREADED
750	75 FL.	75 FLANGED
900	75 FL.	75 FLANGED

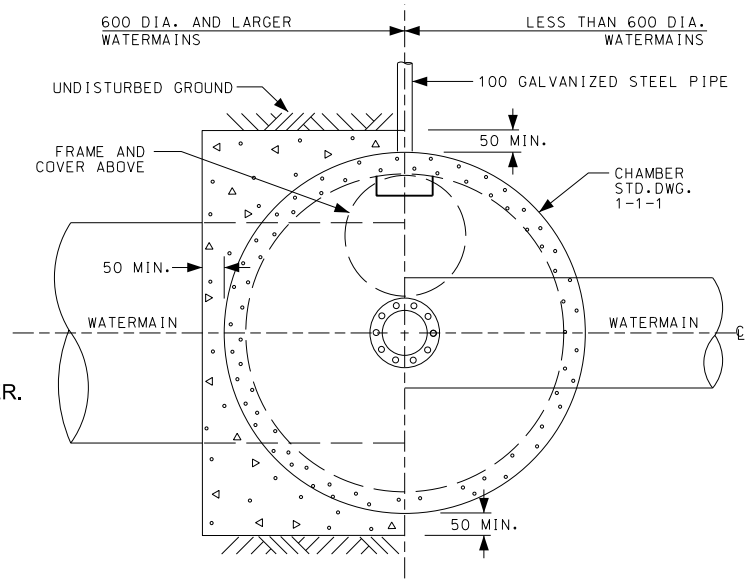

NOTES

1. FOR 25mm AND 50mm AIR VALVES MUST USE I.P.T. THREADED OUTLET WITH BRASS NIPPLES AS REQUIRED.
2. CONCRETE REQUIRED ON WATERMAINS 600mm DIA. AND LARGER.
3. SNORKLE ASSEMBLY REQUIRED FROM AIR VALVE TO TOP OF CHAMBER AS A MINIMUM.
4. AIR RELEASE VALVE TO BE FUSION BOND EPOXY COATED
5. ON MAINS LARGER THAN 900mm DIAMETER, A 750mm DIAMETER OFF WITH TAPPED BLIND FLANGE REQUIRED FOR ACCESS

DELETED

Region of Peel
working with you

PUBLIC WORKS
STANDARD DRAWING

REV. DATE: APRIL 2009

APPROVED BY	DRAWN BY
R.S./A.P.	T.L./G.G.
STD. DWG. NUMBER	SCALE
1-3-5	N.T.S.

AIR VALVE
AND CHAMBER